GEHL

RS SERIES
Telescopic Handlers

NATIONWIDE
STEVENSON
CRANE SERVICE INC.

The Lifting Professionals

Bolingbrook, IL
(630) 972-9199

South Holland, IL
(219) 972-9199

Click Here to Request a Quote

REACH
New Heights

Jobsites demand superior performance. And that's what you'll get with the RS Series Telescopic Handlers. With lift heights ranging from 19'1" to 44', these machines make material placement easy. With their superior load capacities, compact design and tight turning radius, these machines work easily in tight confines, saving you time and money!

- Lift heights ranging from 19'1" on the RS5-19 to 44' on the RS8-44
- Robust, heavy-duty booms with capacities of 5,500 lbs. on the RS5-19 up to 8,000 lbs. on the RS8
- Rear Axle Stabilizer Cylinder – stabilizer cylinder locks axle to improve stability whenever the boom is raised 60° or the parking brake is applied (standard on RS6-42, RS8-42 and RS8-44)
- Tilt Cylinder – increased rollback angle, increased fork tilt capability and quicker cycle times
- Optional Outriggers – adds stability when lifting to full height (available on RS6-42, RS8-42 and RS8-44)
- Internal Wet Disc Brakes – provides better stopping capability and longer life

NEW
MODEL
RS5-19

Size does matter . . . especially when working on confined jobsites. Standing 6'4" with a turning radius of only 11', this little giant makes working in confined spaces easy. With a lift height up to 19'1" and a maximum load capacity of 5,500 lbs., the RS5-19 Telescopic Handler creates big results, maximizing your investment.

Size Does Matter

- **Excellent Visibility –** Operator has a full 360° view from the cab
- **Faster Speed –** Two-speed transmission provides travel up to 15 mph and a lower speed for tractive power
- **Double-Wall Rear Tower –** Provides extra support for increased longevity
- **Excellent Serviceability –** Large hood and access panel under machine provide easy access for routine maintenance
- **Internal Wet Disc Brakes –** Provide excellent stopping capability and long life
- **Dual-Element Air Filter –** Protects engine from airborne contaminants, increasing engine performance and longevity

MAXIMIZE your Comfort.

The operator station in the RS5-19 Telescopic Handler is anything but compact. A modern, ergonomic design maximizes comfort and productivity.

- Direct mechanical joystick controls for boom and fork tilt functions
- Full 360° visibility increases safety and accuracy
- ROPS/FOPS canopy is standard on all models, a ROPS/FOPS cab is optional
- Adjustable armrest for operator comfort, and optional suspension seat available

PERFORMANCE FEATURES

- Robust, heavy-duty boom nose provides added strength where it is needed most
- 64 hp turbocharged Deutz engine is Tier 2-compliant
- Turning radius of 11' makes maneuvering in confined spaces easy
- Hydraulic flows up to 22 gpm provide excellent hydraulic performance to power a variety of attachments
- Exhaust system is covered, protecting it from jobsite hazards
- Lift capacity of 5,500 lbs.

Engine accessibility is made simple with a large, hinged hood on the side of the machine. The hood lifts fully out of the way, allowing plenty of room to access maintenance points, including the battery and oil fill.

Underneath the unit, Gehl has a hinged access door that provides easy access to the engine oil drain and starter.

EXCELLENT SERVICEABILITY

MODELS
RS6-34
RS6-42
RS8-42
RS8-44

Get endless possibilities with the RS Series Telescopic Handlers from Gehl. Offering superior load capacity, excellent visibility and a tight turning radius, these machines will provide a great return on your investment. And high-quality components provide excellent reliability, reducing downtime and maximizing profitability.

Get Endless Possibilities

- **High Lift Heights –** Lift heights from 34' to 44' make material placement easy
- **Strong Booms –** a strong, welded box-section boom with capacity up to 8,000 lbs. on the RS8 models
- **Rear Axle Stabilizer Cylinder –** Improves stability whenever the boom is raised 60° or the parking brake is applied
- **Reinforced C-Channels –** Strong frame with reinforced C-channels performs well under heavy lifting conditions
- **Internal Wet Disc Brakes –** Provide excellent stopping capability and long life
- **Dual-Element Air Filter –** Protects engine from airborne contaminants, increasing engine performance and longevity

MAXIMIZE your Comfort.

PERFORMANCE FEATURES

- The RS6-42 can lift its full capacity of 6,600 lbs. all the way to the top of its 42' maximum lift height, saving time and maximizing performance
- Outriggers available on the RS6 and RS8 models to increase stability and add to the lift capacity
- Travel speeds up to 20 mph to get around the jobsite fast, allowing the operator to get more done in less time
- Turbocharged John Deere engines provide up to 115 hp
- Hydraulic flows up to 40 gpm and hydraulic pressure of 3,000 psi or higher provide excellent hydraulic performance to power attachments
- Lift capacities up to 8,000 lbs.
- Standard auto-leveling carriage with boom lift action

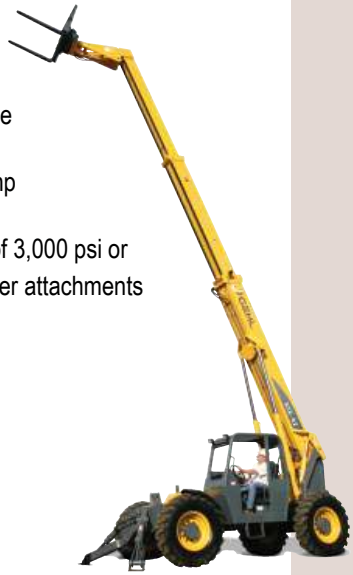

RS Series Telescopic Handlers have spacious, modern operator stations that maximize operator comfort and productivity.

- Pilot-assisted joystick controls for boom, fork tilt and frame level functions are easy-to-operate, reducing operator fatigue
- Full 360° visibility increases safety and accuracy
- ROPS/FOPS canopy is standard on all models, ROPS/FOPS cab is optional
- Adjustable armrest to maximize operator comfort

The tri-function joystick control option allows an operator to control the attachment tilt, auxiliary hydraulics and boom functions with a single joystick.

Speed control knobs increase/decrease the attachment tilt and auxiliary hydraulics. A front trigger activates a control increasing the speed of the functions.

TRI-FUNCTION JOYSTICK CONTROL

STEERING to Success.

All five RS Series Telescopic Handler models feature selective steering, allowing the operator to choose between three steering modes: four-wheel, two-wheel and crab steering. Changing modes is as easy as flipping a switch!

SAHR PARKING BRAKE

The standard SAHR (spring-applied, hydraulic-released) parking brake is located in the front axle. It applies automatically when the engine shuts off, or by simply pressing the rocker switch. The new design eliminates the adjustments and cable stretch associated with other telescopic handlers.

TIGHTER TURNING RADIUS

The RS Series Telescopic Handlers perform brilliantly on tight jobsites due to their tight turning radii and low overall height. The RS5-19 has a turning radius of 11'. The tight turning radius on the RS Series requires less backing up, which increases productivity and efficiency.

TURNING RADIUS

RS5-19	11'
RS6-34	12'6"
RS6-42	13'8"
RS8-42	13'8"
RS8-44	13'8"

Productivity Made Simple

PERSONNEL WORK PLATFORM (PWP) SYSTEM

The Gehl PWP System allows the use of an ANSI/ITSDF compliant personnel work platform to be more safe and efficient.

The PWP System option makes every job almost as easy as working at ground level. When the system is engaged, the transmission is temporarily disconnected, the rear axle stabilizer is engaged, the frame leveling speed is reduced, and the parking brake is applied. A remote shut-off is located on the platform. This increases safety and allows for precision positioning.

GEHL®

REMOTE BOOM CONTROL (RBC) SYSTEM

With the RBC System option, a single operator can control boom and engine functions from outside the cab. When placing loads, an operator can leave the cab to control boom functions from a location that has better visibility – even from within a building.

The RBC System is compatible with any ANSI/ITSDF B56.6 compliant work platform and includes all the safety features of the PWP System.

ATTACHMENTS

A wide variety of attachments provides the versatility to complete any job.

With the RS Series Telescopic Handlers, your operation can do anything from material handling to lifting workers into the air.

The RS Series Telescopic Handlers are versatile machines that complete any fleet.

- High hydraulic flow and system pressure lead to excellent hydraulic performance to power a wide variety of attachments
- Hydraulic self-leveling lift action automatically keeps the load level as the boom is raised
- Personnel Work Platform (PWP) System option works with any ANSI/ITSDF compliant work platform to increase jobsite safety and versatility

Dynattach®
Attachment System

The Dynattach® Quick-Attach system allows quick attachment changes with unsurpassed ease.

The operator leaves the seat only to disengage the attachment.

Enhance Versatility

CARRIAGES

- masonry, framing and standard carriages available in a variety of widths

ROTATING CARRIAGE

- 48" wide
- 66" wide

FORK SHIFT

- 50" wide

PERSONNEL WORK PLATFORMS

- 180° Swing Platform
- 48" x 50" x 114" Platform

SWING CARRIAGE

- 90° and 180° swing

LOG AND PIPE

- with grapple arms

JIB BOOM

- 5' with 50' cable
- 5' with 60' cable

TRUSS BOOM

- 5' without winch
- 8' without winch
- 12' optional winch
- 15' optional winch

A variety of augers and buckets also available!

LOAD CHARTS

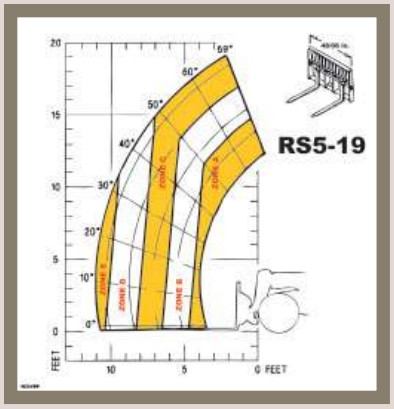

A 5,500 lbs.
B 4,000 lbs.
C 3,000 lbs.
D 2,000 lbs.
E 1,850 lbs.

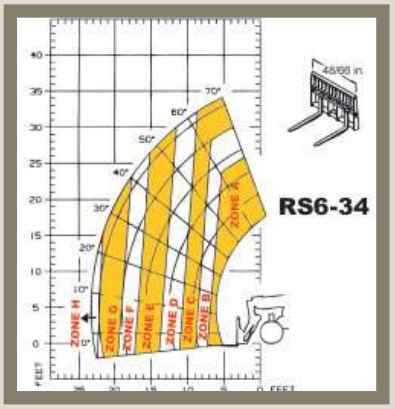

A 6,000 lbs.
B 5,000 lbs.
C 4,000 lbs.
D 3,000 lbs.
E 2,000 lbs.
F 1,500 lbs.
G 1,000 lbs.
H 900 lbs.

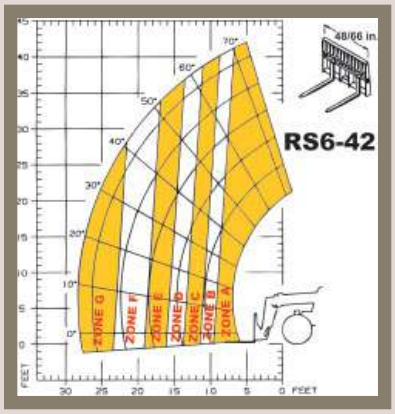

A 6,600/6,600 lbs.
B 6,000/6,600 lbs.
C 5,000/6,000 lbs.
D 4,000/4,000 lbs.
E 3,000/4,000 lbs.
F 2,000/4,000 lbs.
G 1,000/3,000 lbs.
outriggers up/down

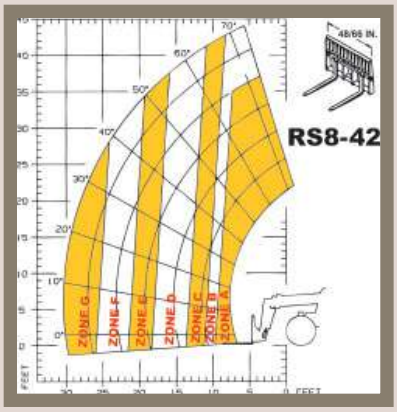

A 8,000/8,000 lbs.
B 7,000/8,000 lbs.
C 6,000/8,000 lbs.
D 4,000/6,000 lbs.
E 3,000/4,000 lbs.
F 2,000/4,000 lbs.
G 1,000/3,000 lbs.
outriggers up/down

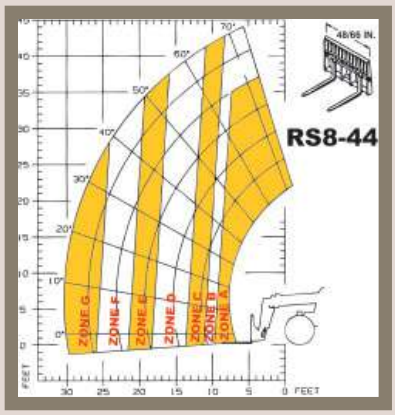

A 8,000/8,000 lbs.
B 7,000/8,000 lbs.
C 6,000/8,000 lbs.
D 4,000/6,000 lbs.
E 3,000/4,000 lbs.
F 2,000/4,000 lbs.
G 1,000/3,000 lbs.
outriggers up/down

SPECIFICATIONS

SAFETY IS NO ACCIDENT.

Gehl Company reminds users to read and understand the operator's manual before operating any piece of equipment. US OSHA regulations require that all forklift operators be trained on the equipment and have proven their competence to a qualified trainer.

Additionally, make sure all safety devices and shields are in place and functioning properly.

Gehl reserves the right to add improvements or make changes in specifications at any time without notice or obligation.

	RS5-19	RS6-34	RS6-42	RS8-42/44
CAPACITIES				
Lift Capacity (kg)	5,500 lbs. (2495)	6,000 lbs. (2722)	6,600 lbs. (2994)	8,000 lbs. (3629)
Max. Lift Height (m)	19'1" (5.8)	34'3" (10.4)	42' (12.8)	42'/44' (12.8/13.4)
Capacity at Max. Lift Height (kg)	3,000 lbs. (1180)	4,000 lbs. (1814)	6,600 lbs. (2994)	7,000 lbs. (3175)
Max. Forward Reach (m)	10'10" (3.3)	23'3" (7.0)	28'3" (8.6)	28'3"/30'5" (8.6/9.3)
Capacity at Max. Reach (kg)	1,850 lbs. (771)	900 lbs. (408)	1,000 lbs. (454)*	1,000 lbs. (454)*
Max. Reach below Grade (mm)	0" (0)	24" (610)	14" (356)	14"/16" (356/406)
				* with outriggers up
ENGINE				
Manufacturer	Deutz	John Deere	John Deere	John Deere
Power (kW)	64 hp (48)	99 hp (74)	std. 99 hp (74) opt. 115 hp (86)	115 hp (86)
Aspiration	Turbo-charged	Turbo-charged	Turbo-charged	Turbo-charged
Model	TD2009 L04	4045T	4045T	4045T
Rated Speed (rpm)	2750	2500	2500	2500
COMPONENTS				
Transmission	Rexroth 2-Speed	Clark 3-Speed	Clark 3-Speed	Clark 3-Speed
Max. Travel Speed (km/h)	15 mph (24)	20.2 mph (32.5)	18.8 mph (30.3)	18.8 mph (30.3)
Steering	4-wheel 2-wheel Crab	4-wheel 2-wheel Crab	4-wheel 2-wheel Crab	4-wheel 2-wheel Crab
Brakes	Internal Wet Disc 2-wheel Hydraulic	Internal Wet Disc 4-wheel Hydraulic	Internal Wet Disc 4-wheel Hydraulic	Internal Wet Disc 4-wheel Hydraulic
Parking Brake		SAHR (Spring-Applied, Hydraulic-Release)		
Axle Manufacturer	Dana	Dana	Dana	Dana
HYDRAULIC SYSTEM				
Pump Type	Gear	Gear	Gear	Gear
Total Capacity (L/min)	22 gpm (83)	29 gpm (110)	40 gpm (151)	40 gpm (151)
System Pressure (bar)	3,350 psi (231)	3,000 psi (207)	3,000 psi (207)	3,000 psi (207)
Hydraulic Tank Capacity (L)	18 gal. (68)	35 gal. (133)	47 gal. (178)	47 gal. (178)
GENERAL SPECIFICATIONS				
Approximate Weight (kg)	10,000 lbs. (4536)	15,100 lbs. (6850)	22,000 lbs. (9979)	23,350/23,500 lbs. (10,591/10,659)
Length - Less Forks (m)	12'4" (3.76)	16' (4.9)	19'1" (5.8)	19'1"/19'10" (5.8/6.1)
Width (m)	5'11" (1.93)	7'10" (2.4)	8' (2.4)	8' (2.4)
Ground Clearance (mm)	14" (350)	14" (350)	16" (400)	16" (400)
Wheelbase (m)	7'6" (2.29)	9'2" (2.8)	10' (3)	10' (3)
Turning Radius (m)	11' (3.35)	12'6" (3.8)	13'8" (4.2)	13'8" (4.2)
Overall Height (m)	6'4" (1.93)	7'10" (2.4)	7'10" (2.4)	7'10" (2.4)
Frame Leveling	N/A	10°	10°	10°
Fuel Capacity (L)	17 gal. (64)	29 gal. (110)	47 gal. (178)	47 gal. (178)
Hydraulic Oil Reservoir Capacity (L)	18 gal. (68)	35 gal. (132.5)	47 gal. (178)	47 gal. (178)
SPECIAL FEATURES				
Quick-Attach Bracket	Dynattach® std.	Dynattach® std.	Dynattach® std.	Dynattach® std.

TIRE OPTIONS

RS5-19	RS6-34	RS6-42/RS8-42/RS8-44
12.00 x 16.5 Bias/10 PR	15.00 x 19.5/12 PR	13.00 x 24/12 PR
12.00 x 16.5 Bias/10 PR - Foam-Filled	15.00 x 19.5/12 PR - Foam-Filled	13.00 x 24/12 PR - Foam-Filled
	405/70 R20 (14.5 x R20) Radial - Traction	13.00 x 24/12 PR - Rock
	405/70 R20 (14.5 x R20) Radial - Foam-Filled	

GEHL
www.gehl.com

143 Water Street
West Bend, WI 53095
U.S.A.

Tel: 262-334-9461
Fax: 262-338-7517

For more information on Gehl equipment, call our literature hotline:

800-628-0491

RS-20M-1/07
©2007 Gehl Company.
All Rights Reserved. Printed in U.S.A.