Technical Data

Specification & Capacities

MPK06V
MPK06.2V

17.11.2021 | Rev.5

[ft] [lb]

OVERALL DIMENSIONS
MPK06V

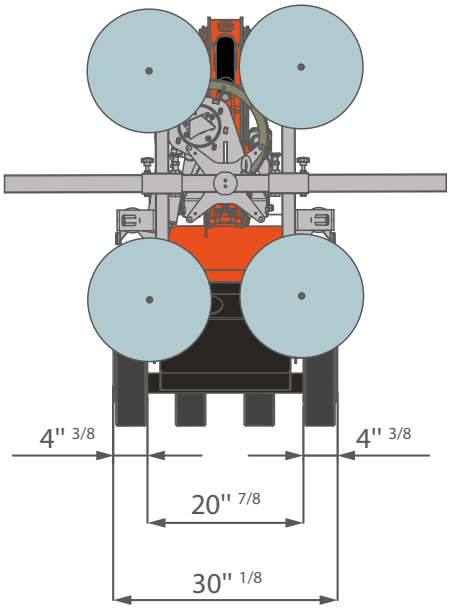

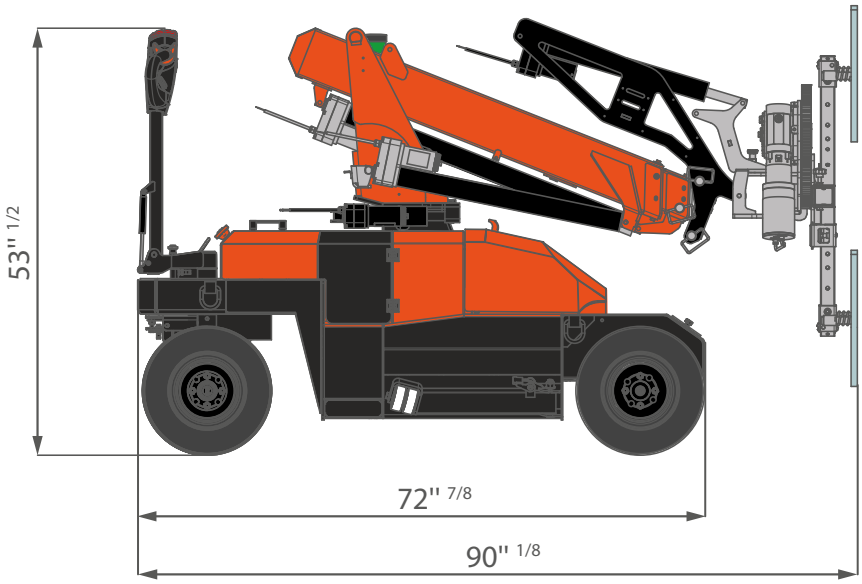

OUTDOOR WHEELS

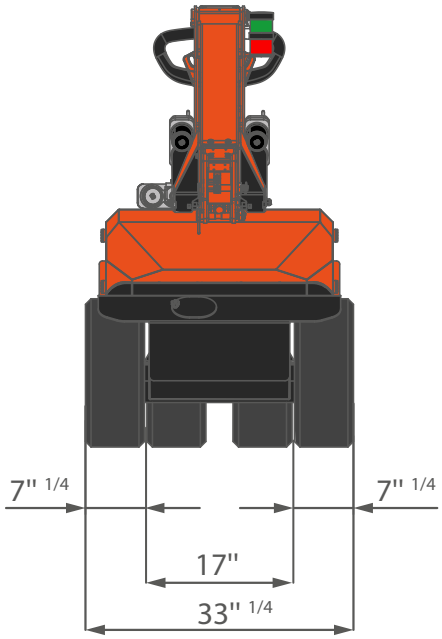

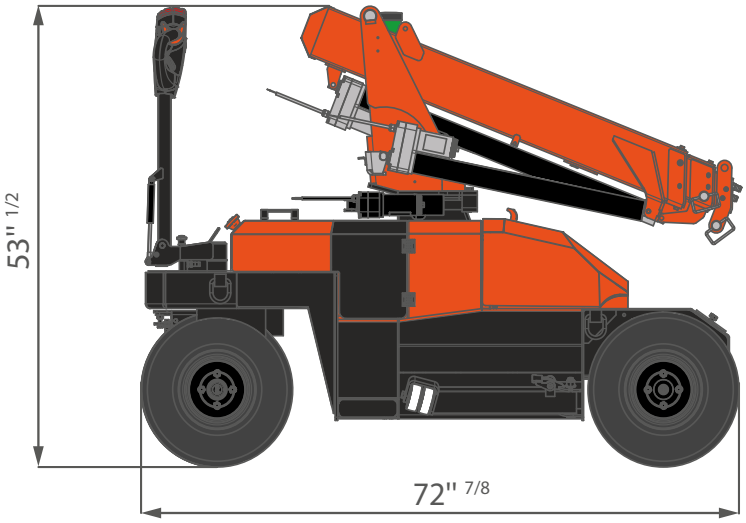

INDOOR WHEELS

[in]

MPK06.2V

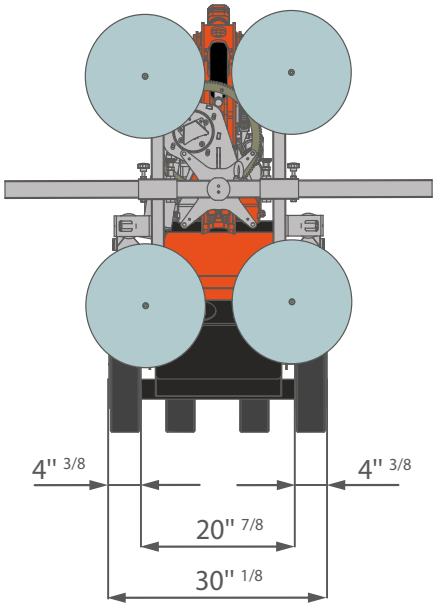

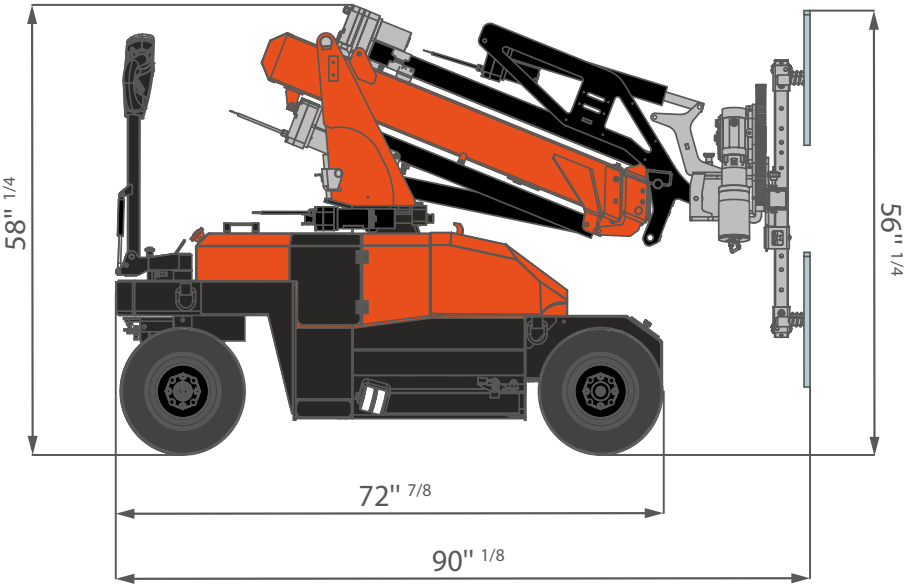

OUTDOOR WHEELS

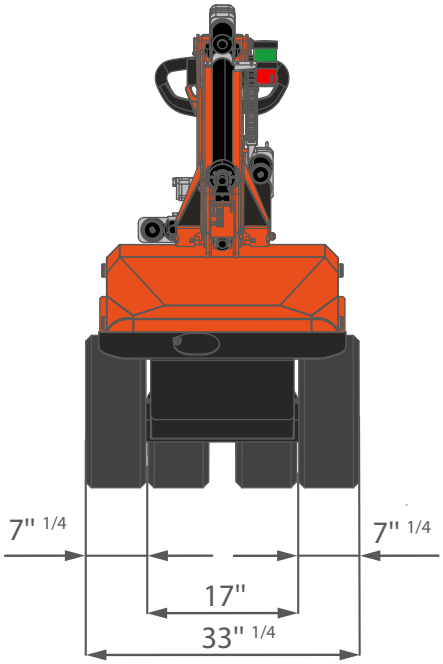

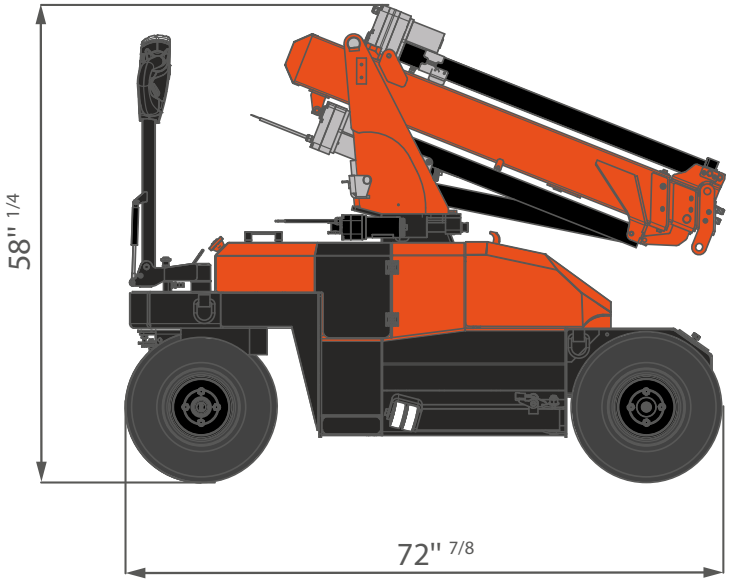

INDOOR WHEELS

[in]

OVERALL DIMENSIONS
MPK06V/06.2V
OUTRIGGER ON SIDE

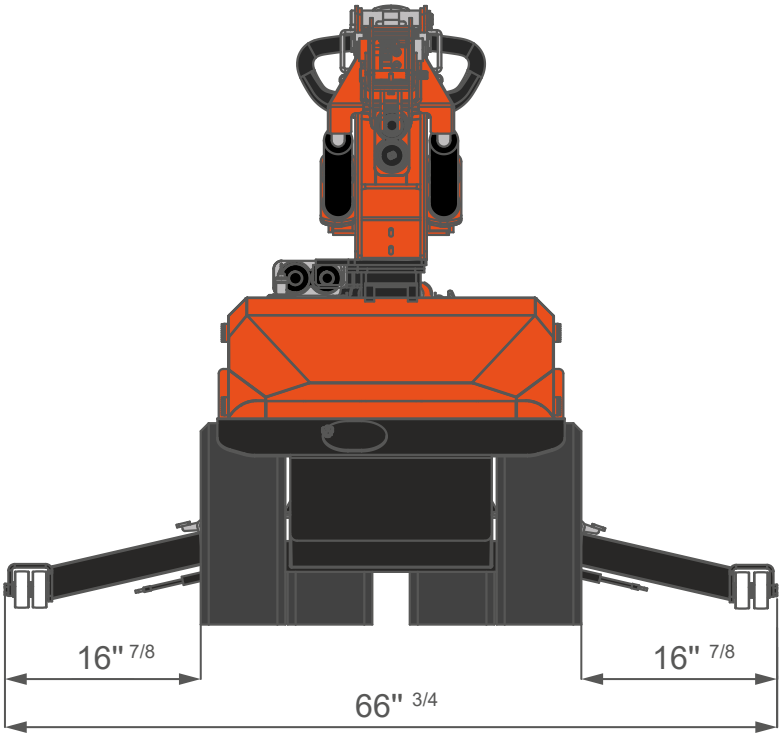

BOOM SWING

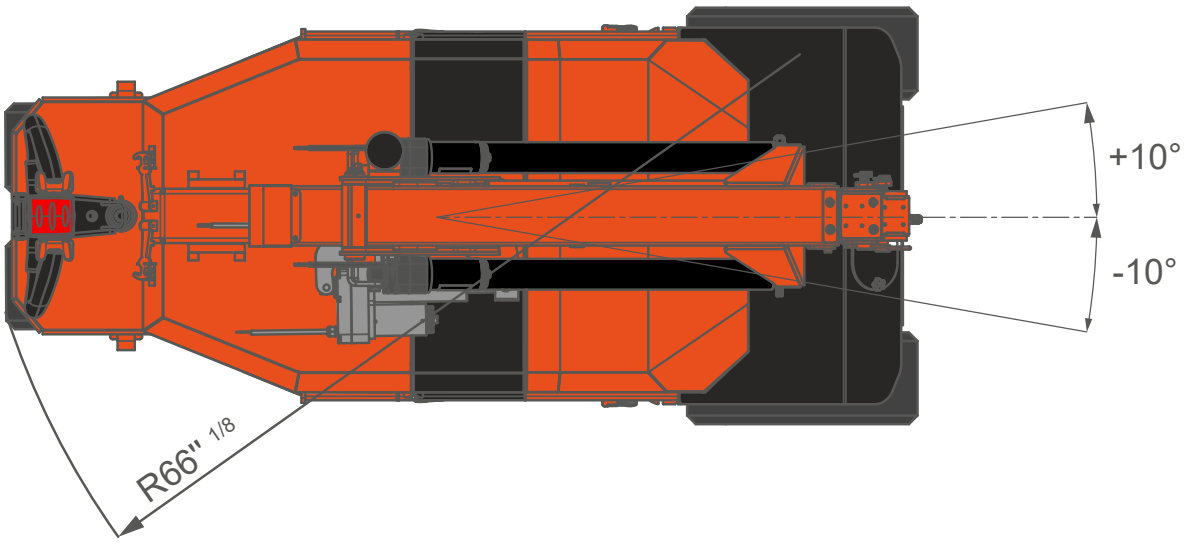

OVERALL INFORMATION

MPK006		Name/ version	lb
	Minipicker	MPK06V	1563
	Counterweight	CW1 (into frame)	90
		CW2 (into hood)	333
		TOTAL	1986

MPK006.2		Name/ version	lb
	Minipicker	MPK06.2V	1600
	Counterweight	CW1 (into frame)	90
		CW2 (into hood)	333
		TOTAL	2023

ATTACHMENTS		Name/ version	lb
	Jib	JIB-MPK06	40
	Manipulator	JVM06	176
	Manipulator	JVM06EV	245

ELECTRIC	Battery	2x 12V 155Ah	
	kW Power	24V DC 3,0kW 4HP	
MOVEMENTS	Travel Speed	mph	2.2
	Gra deability*	13° (23%)	
	Back Wheel Force	lb	585
	Front Wheel Force	lb	1654
	Working Angle	-21° / 55°	
		s	40
	Slewing	-10° / 10°	
		s	1,6
	Boom Telescoping	ft	3'11'' - 9'02''
		s	37

*: Max value only for short distance and a maximum of 30 seconds. Forward movement at maximum gradeability is intended with extended boom and without load

MPK06V/06.2V - MAIN BOOM

with HOOK

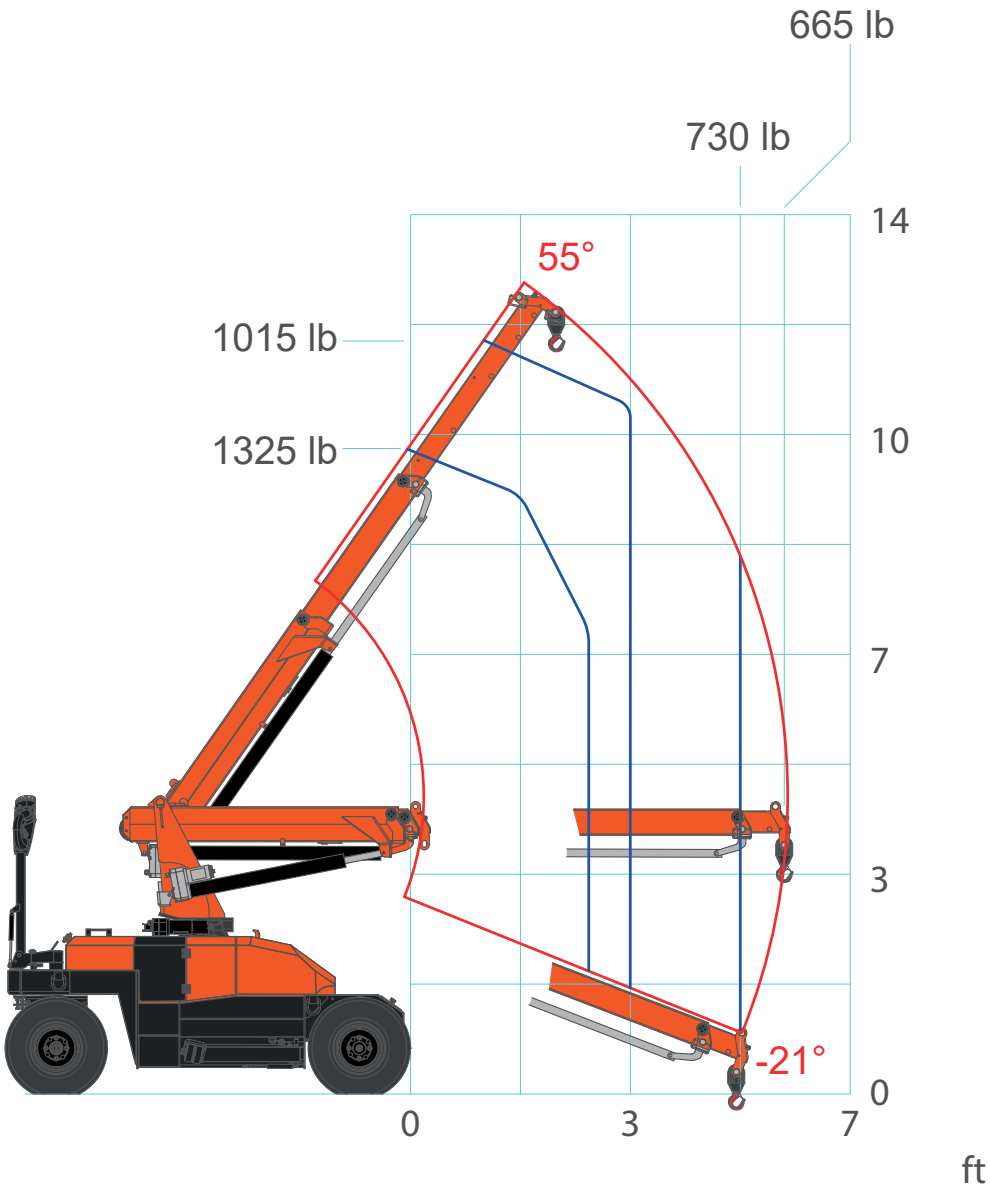

MPK06V/06.2V - JIBMPK06

with HOOK

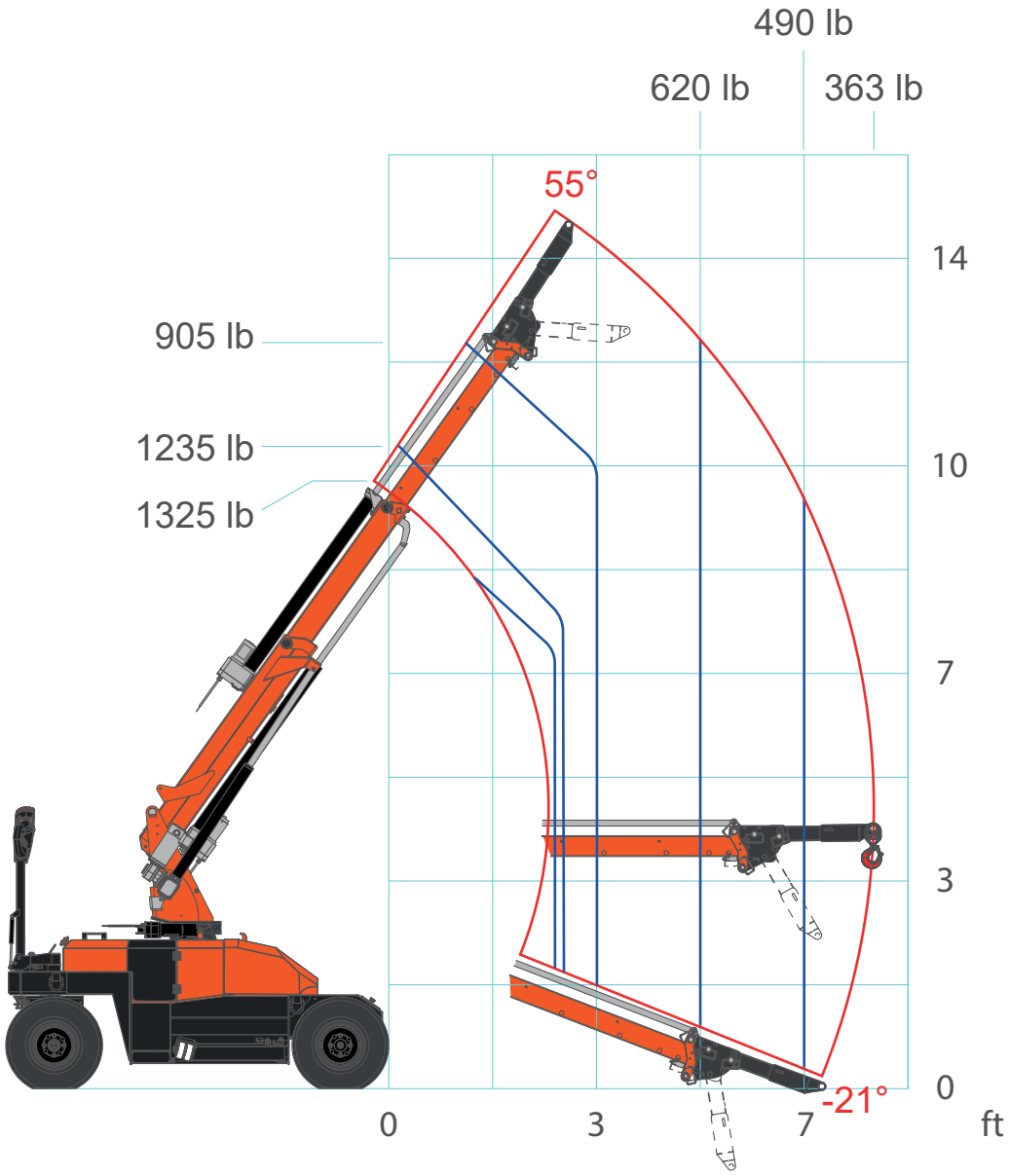

MPK06V/06.2V- JVM06/06EV

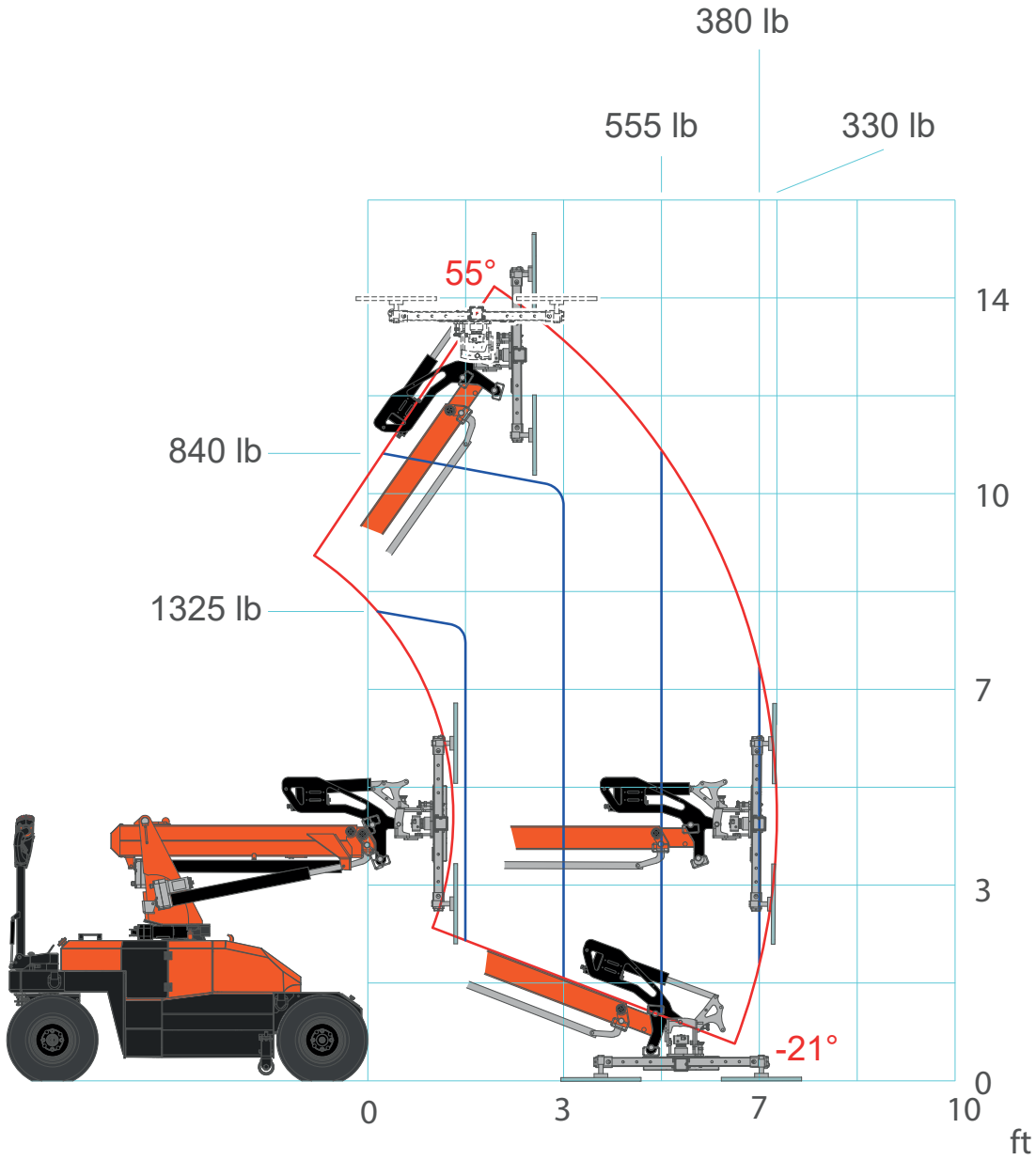

ACCESSORIES
MPK06V/06.2V

ATTACHMENTS & TOOLS

JIB-MPK06

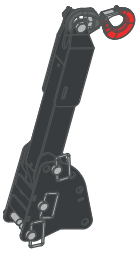

JVM06

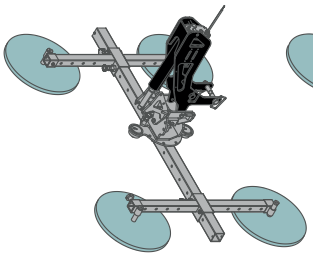

JVM06EV

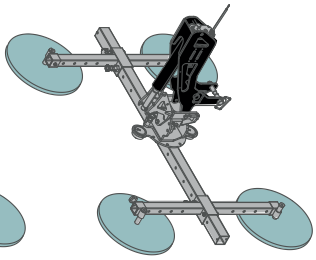

EXTRA-LINK

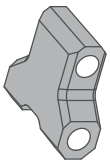

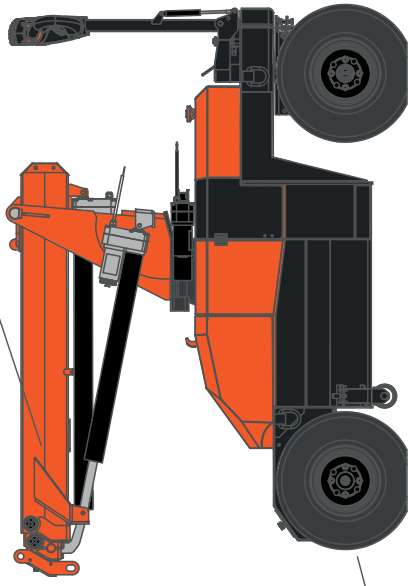

WT-MPK04-06

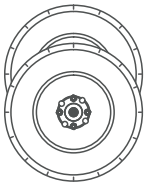

BATTERY CHARGERS

BC-220V30A

BC-110V30A

ACCESSORIES FEATURES
JVM06EV

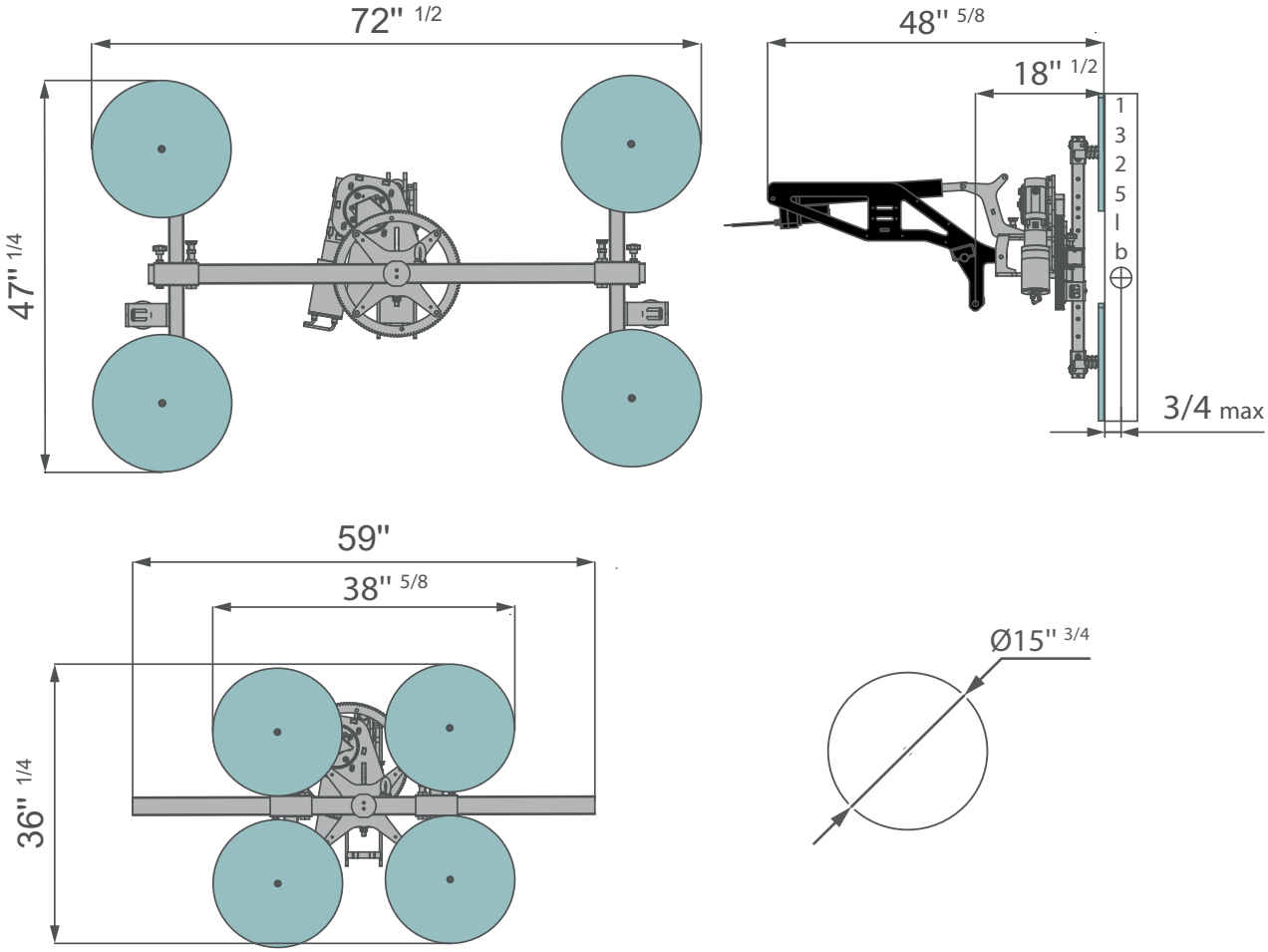

JVM06R CONFIGURATIONS

CONFIGURATION 1

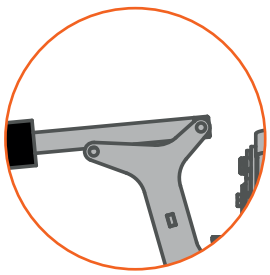

CONFIGURATION 2

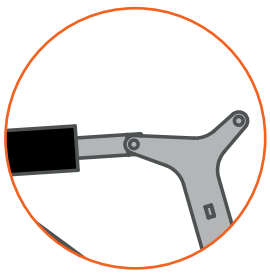

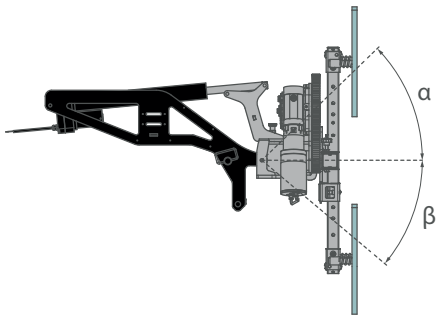

	α	β
1	40°	44°
2	14,5°	70°

[in]

ACCESSORIES FEATURES
JVM06

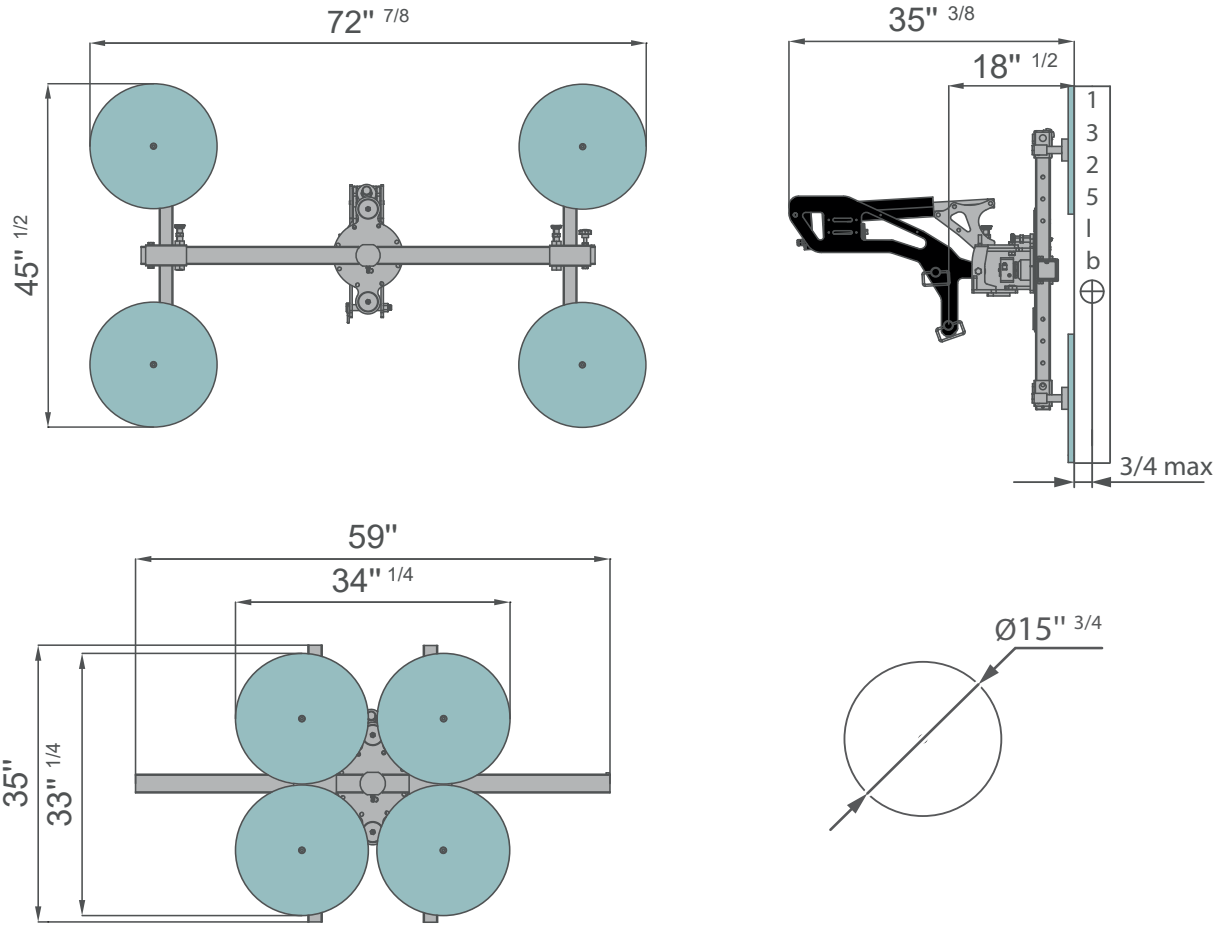

JVM06 CONFIGURATIONS

CONFIGURATION 1

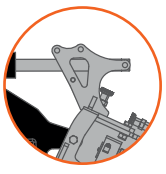

CONFIGURATION 2

CONFIGURATION 3

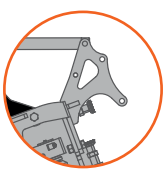

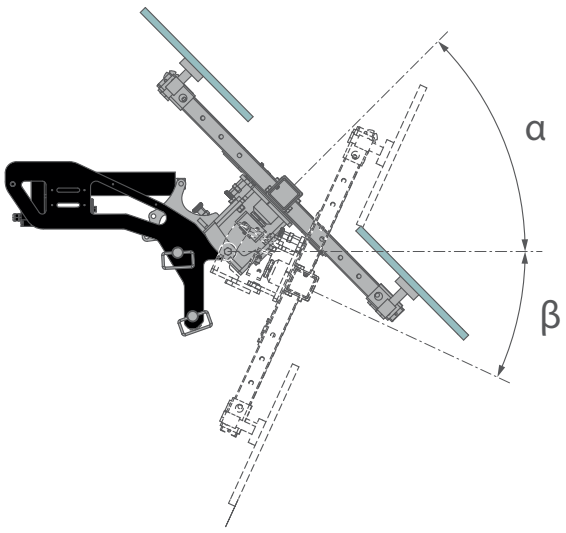

	α	β
1	45°	25°
2	15°	55°
3	0°	70°

JIBMPK06

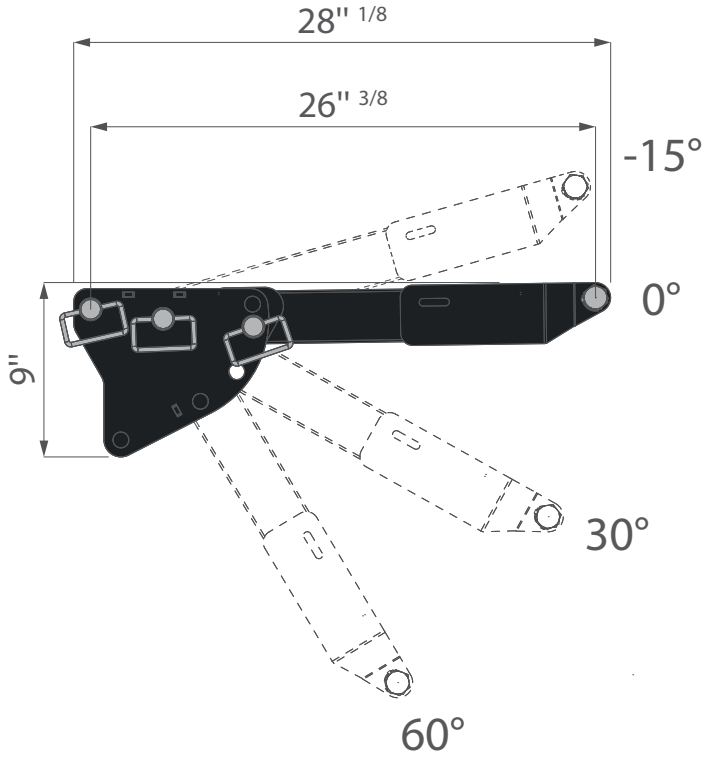

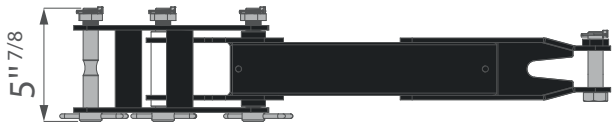

[in]

SYMBOLS

Weight

Engine

Boom Angle

Minipicker

Counterweight

Diesel Fuel

Boom Lenght

Back Wheel Loading Point

Crane

Petrol Fuel

Boom Radius

Front Wheel Loading Point

Dimensions

Tank

Jib on Board

Working Radius

Stabilization Area

Power

Without Jib on Board

Stabilizing Bar

Travel Speed

Battery

Jib Hook Radius

Standard

Gradeability

Lithium Battery

Jib Lenght and Angle

Factory max. load

Outrigger Load

Powerpack

Jib Lenght

Building site max. load

Track Loading

Main Winch

Jib Radius

Maximum inclination of the machinery

Outtriggers Setup

Hookblock

Manipulator Lenght

Hydraulic oil

Ext Tracks Width

Slewing

Manipulator Radius

Winter Warm-up Kit

Chart on Tracks

Slewing Locked

Number of vacuum pads

Horizontal Boom Angle

Slope

Outriggers mats

Grabber

White Pads for Steel Tracks

REMARKS REFERRING TO LOAD CHART

- The load charts are calculated according to EN 13000.
- For the calculation of the load charts at least a wind speed of 9m/s (20 mph) and regarding the load a sail area of 1.2yd² per ton load and a wind resistance coefficient of 1.2 on the load have been taken into account. For lifting of loads with large sail areas and/or high wind resistance coefficients the maximum wind speed as stated in the load charts has to be reduced.
- Lifting capacities are given in kilograms.
- The weight of the hook blocks and hooks is part of the load and therefore it must be deducted from the lifting capacities.
- Working radii are mesured from the slewing centre.
- The lifting capacities given for the telescopic boom apply if the folding jib is removed.
- Subject to modification of lifting capacities.

YOUR JEKKO DEALER

EN All specifications and features herein described can be changed without prior advice. All indicated data are indicative only and are not binding as crane performs differently depending on its use. **IT** Tutte le caratteristiche e le specifiche descritte possono essere soggette a variazioni senza preavviso. Tutti i dati riportati sono forniti a puro titolo informativo e non sono impegnativi dal momento che le prestazioni della macchina variano in funzione dell'utilizzo. **DE** Unangekündikte Änderungen sämtlicher Eigenschaften und Daten sind möglich. Alle Angaben sind Richtwerte und nicht verbindlich da die Leistungen der Vorrichtung von deren Einsatz abhägen. **ES** Todas las caracterìsticas y las especificaciones aquì indicadas pueden ser sujetas a variaciones sin aviso. Se dan todos los datos aquì indicados como simples informaciones. No se consideran como vinculantes, dado que las prestaciones del maquinario pueden variar. **FR** Toutes les caractéristiques et le spécifications descriptives peut être sujet à variation sans préavis. Tout les données rapportés sont fourni à titre informatif et ne sont pas engager au moment que la prestation de la machine change en function de l'emploi.

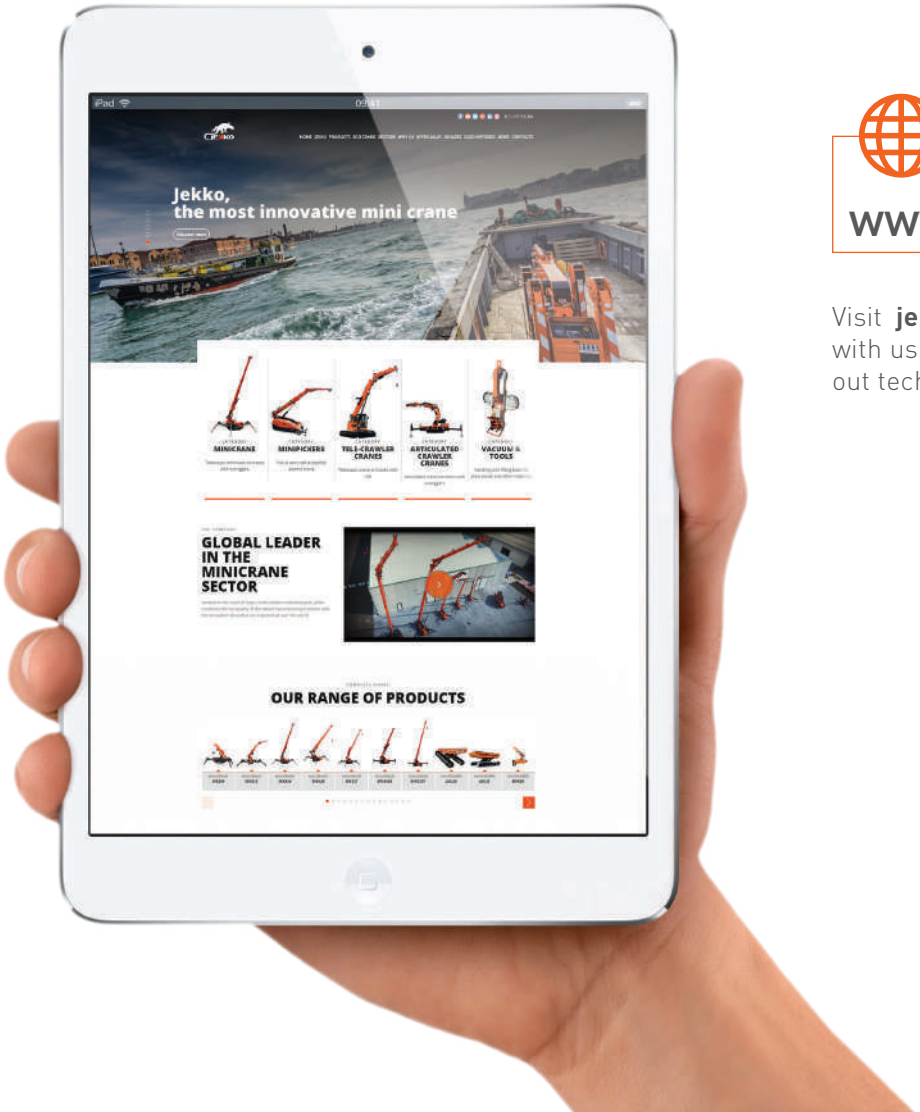

www.jekko-cranes.com

Visit **jekko-cranes.com** to keep in contact with us, discover all the latest news and find out technical details of all our products.

SERIAL NUMBER:

17.11.2021 | Rev.5

Jekko s.r.l.
Via Campardone, 1 - 31014 Colle Umberto (TV) - Italy
info@jekko.it - www.jekko-cranes.com